Visible Light Communication

Punith P. Salian, Sachidananda Prabhu, Preetham Amin, Sumanth K.Naik, Dr. M.K. Parashuram
N.M.A.M. Institute of Technology, Nitte, Karkala, Udupi

ABSTRACT

Light Emitting Diodes are set to penetrate many areas of everyday life. An interesting property of these devices in addition to their lightening capabilities, is that they can also be utilised for data transmissions as well. LED's require low power for their operation and have very high switching speeds. This dual purpose application can reduce our dependency on the densely used means of communication the Radio frequency communication. The project aims to build a system which carries out communication using visible light that are employed for indoor illuminations. The higher bandwidth of the visible light is exploited for high speed data transmissions.

For the communication to be full duplex it requires a downlink and an uplink. The downlink is implemented using the visible light. Whereas the uplink is provided using Infrared LED's, as visible light would serve no purpose of illumination. Furthermore, the IR link also eliminates the chance of interference.

When communication is carried out through visible light there are problems associated with it. The data transmission rates should be high enough so that flickering of the LED's should not be detected. Sometimes it is possible for complete fadeout of the signals. To protect the data integrity the data should be framed, so as to detect lost signals and to ensure correct transmission and reception of the data. Computer network protocols like stop and wait algorithms [1] are employed to solve this problem.

The data can be of any form such as text, an audio, image or the video. This project shows how visible light can be used to transfer text data from one computer to the other computer. The computers are used as the end device. The computers with the help of Python [2] can be used to interface software to the hardware.

1. INTRODUCTION

The radio spectrum is highly congested and the demand for wireless data is making this much worse. Bandwidth required for the RF communications is rapidly getting exhausted. In current situation, more bandwidth is being found but it's clearly not enough, it is finite. More nodes are being added, cell splitting has been done for years but this is expensive. Also, two nodes do not have double the capacity of one as due to interference issue, the law of diminishing returns is at play. Moreover, doubling the infrastructure will not double the revenue. Spectral efficiency also improved over the years, but recently the increase in wireless spectral efficiencies has slowed. Furthermore, research on hazards of RF have found that extreme RF radiation have adverse effect on environment.

Visible light being a natural source of energy can be thought of has an alternative to the RF communication. Visible Light Communication can be carried out using optical devices such as LED's. Lighting reaches nearly everywhere, so communication can ride along for nearly free. LED communication offers an entirely new paradigm in wireless technologies in terms of communication speed, flexibility, usability and security. An opportunity is arising by using current state of the art LED lighting solutions for illumination and communication at the same time and with same module. This can be done due to the ability to modulate LED's at speeds far faster than human eye can detect while still providing artificial lighting. Thus while LED's will be used for illumination, their secondary duty could be data communication onto lighting system.

LED's can be switched off and switched on faster than we can perceive. This on-off motion can be used to represent 0's and 1's in other word, digital communication [3]. A sequence of such variation can cause a flow of data. This, or transmission by more complex modulation schemes such as Orthogonal Frequency Division Multiplexing (OFDM), is the technological basis of visible light communication or wireless optical communication.

Visible communication is typically implemented using white LED light bulbs. These devices are normally used for illumination by applying a constant current through the LED. However, by fast and subtle variations of current, the optical output can be made to vary at extreme high speeds. Unseen by the human eye, this variation is used to carry high -speed data.

Goals of System Design

- Achieve high speed data wireless communication.
- Create wireless communication network using existing light resources in order to achieve low cost communication.

1.1 Technical Background

To understand the concept of Visible Light Communication, one should have knowledge about the LED's, their switching characteristics, the light sensors their switching speeds [4]. These are essential and crucial factors that decide the data rates. The data to be sent is divided into frames, framing protocols used in UART's [5] such as start bit, stop bit concepts are imported in the project. The communication protocols like stop and wait algorithms [1] are used for error controlling. Different modulation techniques [3] that are used in communication systems would also be helpful. Finally some knowledge of computer coding using Python [2] would facilitate in developing the front end for the application.

TEDX talk by Prof. Harald Hass [6] gives us an idea that we can provide an alternative for RF

978-0-7695-5146-3/13 $26.00 © 2013 IEEE
DOI 10.1109/TIIEC.2013.74

Authorized licensed use limited to: TU Hamburg. Downloaded on March 09,2025 at 09:16:51 UTC from IEEE Xplore. Restrictions apply.

communication at least for short distance wireless communications using visible light.

1.2 Proposed solution

The project is mainly focused to develop an alternative to short range RF communication with high speed data transfer capability. The short range communications presently involves technologies such as Bluetooth, Wi-Fi etc.

Furthermore Visible Light Communication (VLC) systems can form a network of interconnected LED Lamps. This network can be deployed in a large organization such as hospitals, shopping malls etc. Most publications would show how to carry out VLC, what sensors to be used and some of them give the technical challenges. But we have developed an application that uses VLC, which enables transferring data between two devices.

1.3 Organization of the report

Report has been organised into five sections

- Proposed solution
  It provides the system level block diagram. It focuses on the main hardware and the software components used to build the system.
- Hardware Implementation
  It includes details of all the hardware components that are used to develop a working prototype.
- Software implementation
  It includes algorithms for the software operating system of the MSP430 [7] and the Python [2] codes which provides the front end for the application running on the computer which uses VLC.
- Results
  It gives details of the various outputs of the hardware components. Simulation results and the screenshots of the Graphical User Interface are also included.
- Conclusion

2. PROPOSED SOLUTION

To carry out VLC, the two main hardware components required are the LED Lamp and the portable MODEM which is connected to the receiving end computers. The main software components would be the application running on the computer which provides a frontend, this is done using Python.

The LED lamp contains LED arrays which are the light sources which are driven by the LED Drivers [8].The IR receiver with a centre frequency of 38 K Hz. The IR receiver demodulates the data sent through the UPLINK. The MODEM has a photo transistor [4] as sensors, whose response decides the maximum data rates. The data to be sent are modulated using an astable multivibrator.

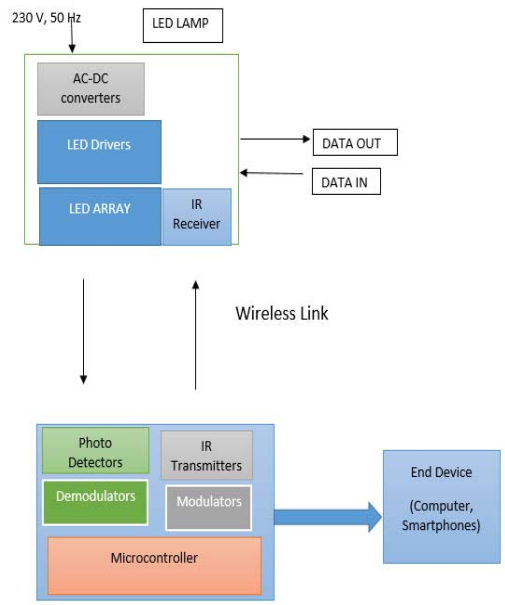

Figure 1: System level Block diagram.

3. HARDWARE IMPLEMENTATION

The section involves two main parts

1) The MODEM
2) LED LAMP

3.1 Modem

The MODEM helps to transfer data through the uplink and also to extract data that is present in the surrounding light. It is a portable unit connected to the end device.

3.11 Modulator

The data coming from the microcontroller is modulated with a carrier frequency of 38 KHz generated by an astable multivibrator built using LM555. ON-OFF Keying [3] is the modulation scheme that is utilized to transmit data through an Infrared LED (analogous to an antenna in RF communications).

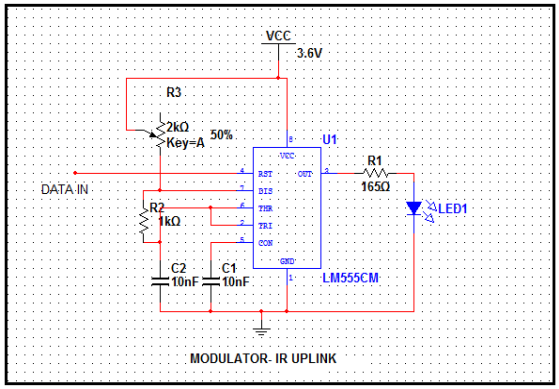

Figure 2: Modulator for the Infrared transmitter (Uplink).

3.12 Demodulator

It consists of the phototransistor as a light sensor, whose output is fed to a comparator built using TLV2782, low power OP-AMP. The Non Inverting

Authorized licensed use limited to: TU Hamburg. Downloaded on March 09,2025 at 09:16:51 UTC from IEEE Xplore. Restrictions apply.

terminal has a phase delay circuit. The comparator circuit makes the DATA IN into binary compatible levels. Even though the amount of light falling on the phototransistor varies, the comparator ensures that it is modified to a correct binary level which can be processed by the microcontroller.

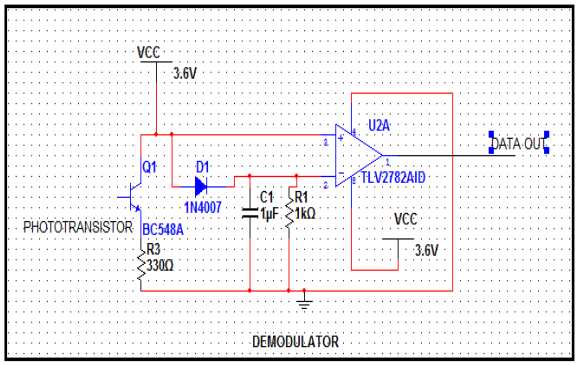

Figure 3: Demodulator built using Phototransistor as a light sensor.

3.2 LED Lamp

This is a fixed unit, which includes a transmitter, receiver and a power supply unit. The LED's operates with DC supplies. Therefore a power supply unit which converts AC to DC is essential. The transmitter is a LED array along with the LED drivers [8]. The receiver is the IR receiver TSOP 1738 which has a centre frequency of 38 KHz.

3.21 Power Supply

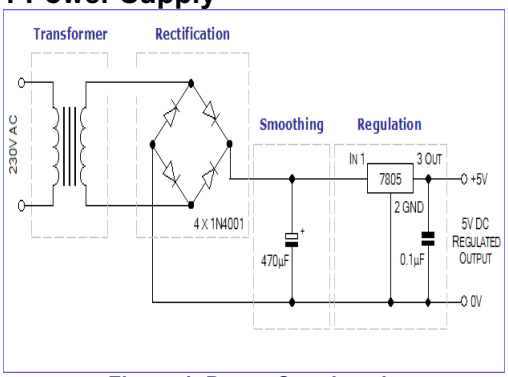

Figure 4: Power Supply unit.

3.22 Transmitter and Receiver

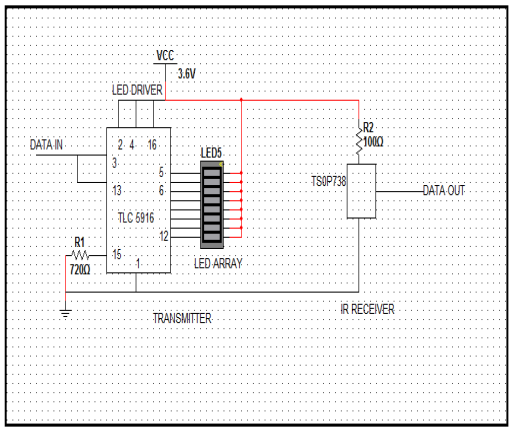

Figure 5: Transmitter and IR receiver at the LED Lamp

The DATA IN line as shown in Figure 2 is connected to LED Driver TLC5916 which drives the LED array. The LED array acts as a visible light transmitter. The data that is received from the UPLINK is picked up by IR receiver TSOP1738 with a centre frequency of 38 K Hz. The received data is then transmitted through the DATA OUT line. DATA IN and DATA OUT line forms a part of network which can be connected to a router, modem or wired or wireless link which reaches out to the external world either through a telephone line or GSM mobile network.

4. SOFTWARE IMPLEMENTATION

4.1 MSP430 Software Algorithms

The MSP430 [7] software operating system decides the data rate, data framing and error detection processes.

4.11 Data Rate

It depends on how fast the shifting of the data occurs in the microcontroller ports.

4.12 Data Framing

Initially with nothing to transmit the output bit is set to high which makes the LED lamp to turn on. The data needs to be framed with a ten bit pattern containing a start bit to indicate the start of the data byte, followed by a data byte and then the stop bit, which helps in detecting the fade out.

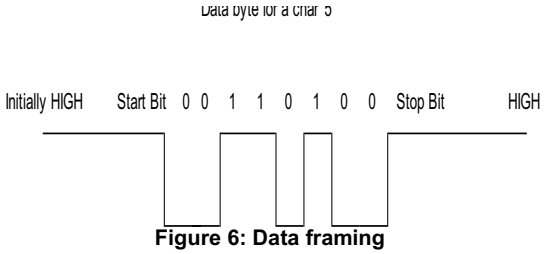

Figure 6: Data framing

Consider char '5' sent from the computer the microcontroller would serialize the data and make it to

Authorized licensed use limited to: TU Hamburg. Downloaded on March 09,2025 at 09:16:51 UTC from IEEE Xplore. Restrictions apply.

a format as shown in the figure 7.

4.13 Error detection

In case the stop bit is high the character received in the microcontroller is forwarded to the computer. If the stop bit is zero, then negative acknowledgement signal (NAK) is sent to the receiving device.

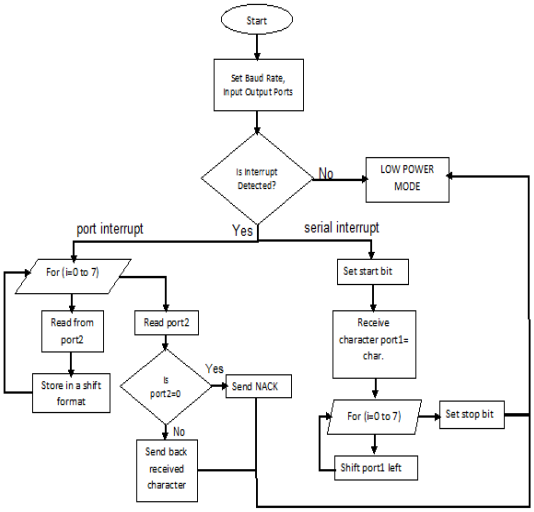

Figure 7: MSP430 Firmware algorithm

4.2 Python Algorithms

Python was chosen as it could run on any embedded device running Linux. It contains many libraries that can handle transmission of text,audio,video and images. Python running on the computer has primarily three basic tasks

1) Sending the message
2) Receiving and displaying the message on the computer.
3) Providing a Graphical User Interface

4.21 Sending and Receiving Algorithm

Python libraries: Pyserial and time are used.

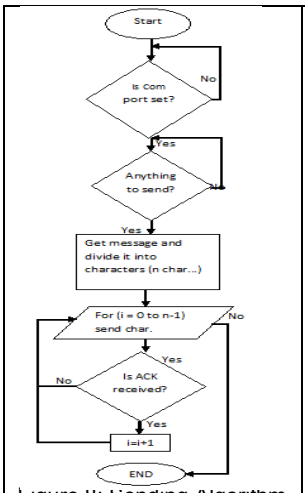

Figure 8: Sending Algorithm

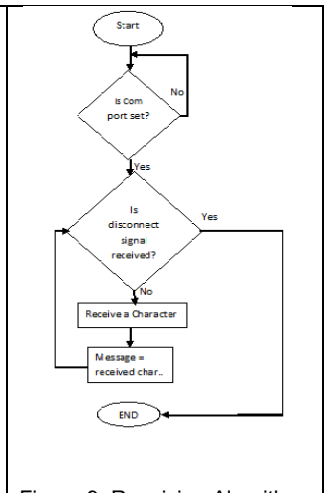

Figure 9: Receiving Algorithm

4.22 Graphical User Interface

Python Libraries: Tkinter, Pyserial, time and PIL are used.

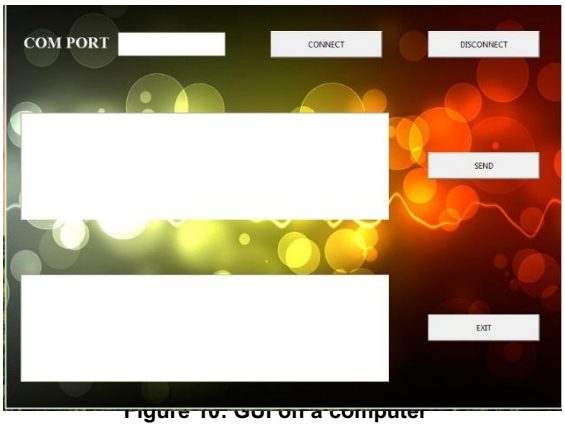

Figure 10: GUI on a computer

5. RESULTS

Distance of wireless communication successfully obtained about **5m.**

Speed of wireless communication obtained:

Downlink = 10kbps

Uplink = 2kbps

It was seen that as the data rates were increased the range of the reception of the signals through VLC decreases.

The fluctuating ambient light in the surroundings did not cause any disturbances in the data transmission.

When an obstruction was introduced in the VLC path, the fade out of the signals were witnessed. But with the fadeout control codes, it was successfully able to retrieve the data once the obstacle was removed.

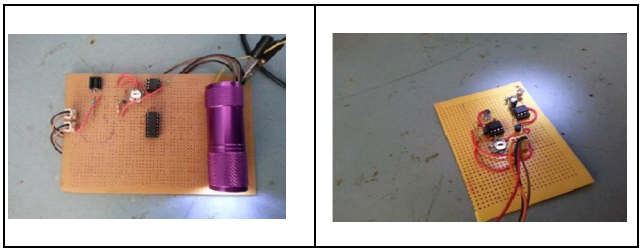

Figure 11: LED Lamp and Modem

Authorized licensed use limited to: TU Hamburg. Downloaded on March 09,2025 at 09:16:51 UTC from IEEE Xplore. Restrictions apply.

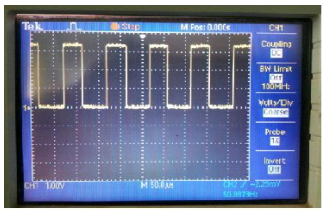

Figure 12: Phototransistor output when the LED's were given a square wave at 10 K Hz (20 Kbps)

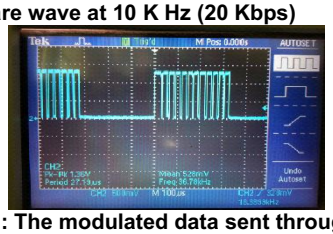

Figure 13: The modulated data sent through the IR transmitter (uplink)

6. Conclusions

LED's are majorly used for indoor lighting purposes. This project gives a new dimension to the very popular LED's as a speed data transmitters. It can be viewed as a replacement to RF communication for short ranges to some extent. The phenomenon of data transfer using Bluetooth,
Wi-Fi can be implemented using VLC's. VLC has no health hazards associated with it. A low cost communication system can be set up.

Even though the LED's have a very high switching speeds, the receiving device should be speed enough to catch up the data emerging from the light source. Therefore data rates are decided by the light sensors that are used. Also Visible light is a natural broadcasting medium. It is not suitable for the UPLINK to be implemented using VLC. Hence IR link is used, which definitely deviates our attention from the Visible Light Communication concept. Visible light cannot penetrate the solid structures, this greatly reduces the range of the transmissions. On the other hand it also serves as a secure link, as it avoids information getting leaked to the wrong end.

With the further advancement of the project in future, visible light communication can be a replacement to almost all indoor and short range communication purpose. The data rates can be further enhanced by using suitable light sensors. Instead of using ASK modulation, orthogonal frequency Division multiplexing can be used.

References

[1] Behrouz A. Forouzan "*Data Communication and Networking".*
[2] Dr Andrew N Harrington *"Hands On Python".*
[3] Dr K Sharma, A Mishra, Rajiv Saxena "*Analog And Digital Modulation Techniques Overview*" Technia International Journal of Computer Science and Communication Technology,Vol-3 July 2010.
[4]VanNTran, Robert Stuart, Hardik Bhavsar "*Phototransistor Switching Time Analysis*" California Eastern Laboratories
[5] Universal Asynchronous Receiver/Transmitter- www.wikipedia.org.
[6] Harald Hass, TEDX talk on '*Wireless Data from every light bulb'* - www.tedx.com.
[7] MSP430Launchpad-processors.wiki.ti.com
[8] Michael Day "*LED Driver considerations*"

Bill of Materials

	Component	Cost/ component	Quantity	Total cost of component
1	MSP430G2553 Launchpad	Rs 350	2	Rs 700
2	TLC5916	Rs 25	1	Rs 25
3	TLV2782	Rs 8	1	Rs 8
4	LM555	Rs 5	1	Rs 5
5	UA7833	Rs 7	1	Rs 7
6	IR LED	Rs 7	1	Rs 7
7	TSOP1738	Rs 15	1	Rs 15
8	BC547	Rs 5	2	Rs 10
9	Phototransistor	Rs 60	1	Rs 60

Authorized licensed use limited to: TU Hamburg. Downloaded on March 09,2025 at 09:16:51 UTC from IEEE Xplore. Restrictions apply.